V101 (Wafer) / V102 (Lug) Series DN25-600 Butterfly Valves Material List

Design Standards	Design Standard	EN 558 Series 20 (DIN3202-K1)
		ISO5752 Series 20
		API609 Table 1
		BS5155 Series 4
	Flange Standard	EN1092 PN 6/10/16
		ANSI B 16.5 Class 150
	Top Flange Standard	ISO5211
	Leakage Test Standard	EN12266-1/2
		ISO5208, Category 3
		API 598 Table 5
		ANSI B16-104, Class VI
	Working Pressure	Max 16 bar
	Differential Pressure	Δp 16 bar
	Vacuum	Max 0.2 bar relative pressure

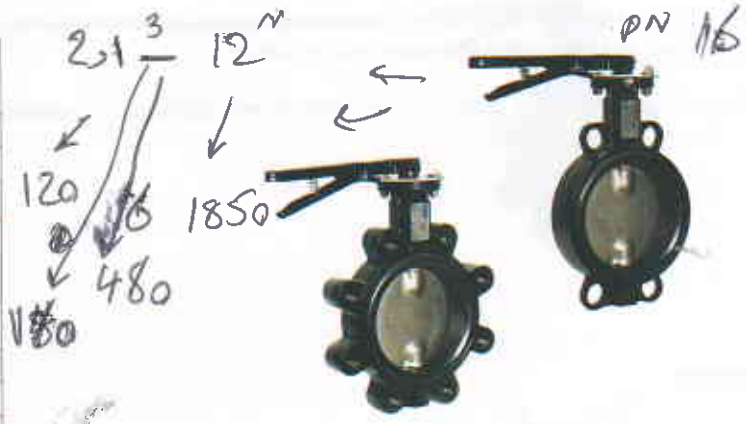

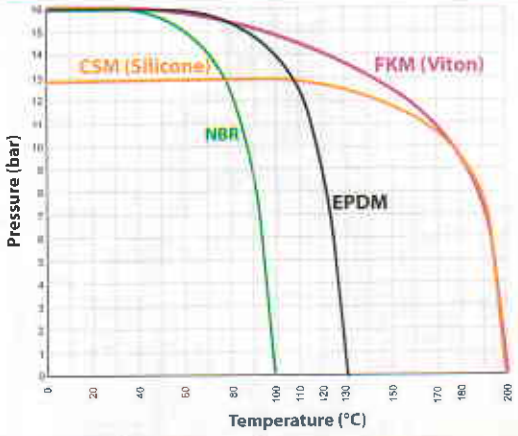

	Part No	Part Name	Available Material
Material List	1	Body	Powder Coated GG25 Cast Iron
			Powder Coated GGG40 Ductile Iron
			AISI304 Stainless Steel
			AISI316 Stainless Steel
	2	Disc	AISI316 Stainless Steel
			Nylon11 Coated GGG40 Ductile Iron
			Aluminium Bronze
			ETFE Coated AISI316 Stainless Steel
	3	Seat	EPDM (-30° C ~ +130° C)
			NBR (-20° C ~ +110° C)
			Silicon (-30° C ~ +200° C)
			Viton (-15° C ~ +200° C)
	4/5/6	Bushing	Bronze / PTFE
	7	Upper Stem	AISI420 Stainless Steel
			AISI316 Stainless Steel
	8	Low Stem	AISI3420 Stainless Steel
			AISI316 Stainless Steel
	9	Cap	Carbon Steel
	10	O-Ring	NBR
	11	Stopper Plate	Carbon Steel
	12	Screw	Stainless Steel
	13	O-Ring	NBR/Viton

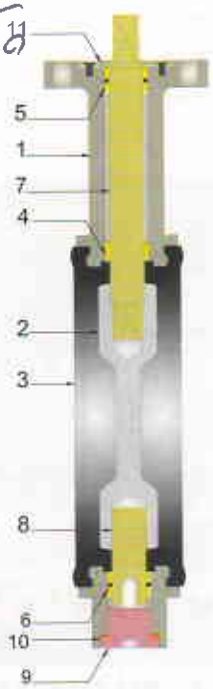

DN25-300 Sizes

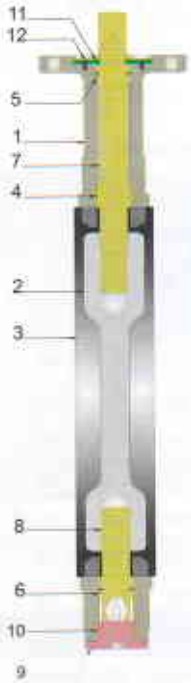

DN350-600 Sizes

V101 Series Wafer Type DN25-300 Butterfly Valves

PROVAL V101 Series wafer type, butterfly valves having easily removable and replaceable resilient rubber seats are available in sizes DN25 to DN300.

The flange locating holes are drilled to meet PN10/16 and ANSI Class 150 drilling standards.

Dimensions

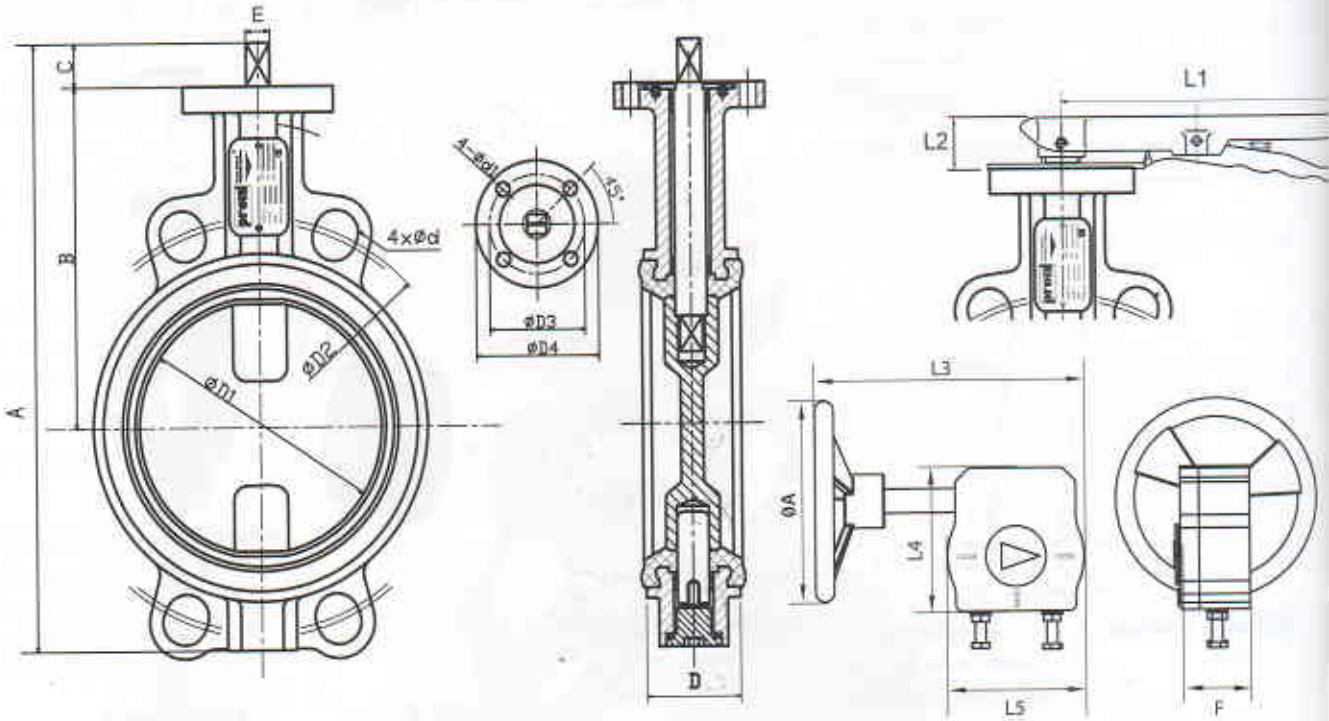

Dimensions (mm)

Size (DN)	ØD1	ØD2	ØD3	ØD4	4-Ød	4-Ød1	A	B	C	D	E	L1	L2	L3	L4	L5	ØA	F	Weight (Kg)		
																			Free Shaft	Lever Op.	Gear
25/32	31,5	85	42	55	18	6	145	92	12	33	9	100	30	200	107	102	150	54	1,0	1,3	6,
40	38	110	42	55	18	6	155	98	12	33	9	100	30	200	107	102	150	54	1,0	1,3	6,
50	49	125	50	65	18	7	206	126	16	43	9	180	30	200	107	102	150	54	2,1	2,3	7,
65	64	145	50	65	18	7	221	133	16	46	9	180	30	200	107	102	150	54	2,5	2,8	7,
80	78,5	160	50	65	18	7	244	150	16	46	9	180	30	200	107	102	150	54	3,0	3,3	8,
100	100	180	70	90	18	10	302	170	24	52	11	284	30	200	107	102	150	54	4,8	5,2	10
125	124	210	70	90	18	10	323	181	25	56	14	284	30	200	107	102	150	54	6,6	7,0	11
150	148	240	70	90	22	10	349	196	25	56	14	284	30	200	107	102	150	54	7,5	7,9	12
200	197	295	102	125	22	12	428	238	30	60	17	350	44	250	165	140	250	70	13,8	14,9	26
250	248,3	355	102	125	26	12	487	253	39	68	22	350	44	250	165	140	250	70	21,2	22,3	33
300	298,3	410	102	125	26	12	574	300	39	78	22	350	44	250	165	140	250	70	31,5	42,6	45