BV3
BV5

Ball Valves
Robinet à boisseau
Kugelhähne
Llaves esféricas

EN ISO 9001

Type AA - Female Threads
Typ AA - Innengewinde
Tip AA - Filet femelle
Tipo AA - Rosca hembra

Techn. Data

Typ	Q max.	P max.
B3 (1 1/2")	800 lpm 208 gpm	100 bar 1500 psi
B5 (2 1/2")	1600 lpm 416 gpm	70 bar 1030 psi

Type ED - Swivel Nut
Typ ED - Überwurfmutter
Type ED - Ecrou raccord
Tipo ED - Tuerca loca

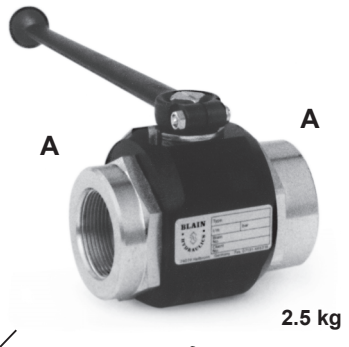

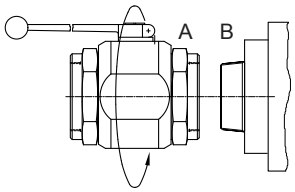

Standard
A - A

Pipe Thread
Seal Tape Required

Rohrgewinde
Dichtband notwendig

Filetage au pas du gaz Bande d'étanchéité nécessaire

Rosca para tubos
Se necesita cinta de junta

Option
E - D

Faster Connections
Perfect Sealing

Schnelle Montage
Perfekte Dichtung

Montage rapide
Joint parfait

Montaje rápido
Estanqueidad perfecta

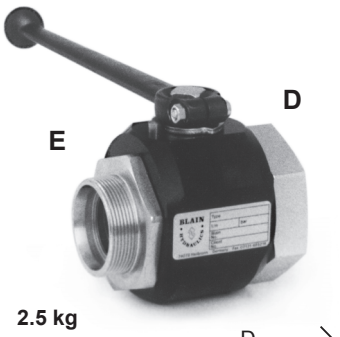

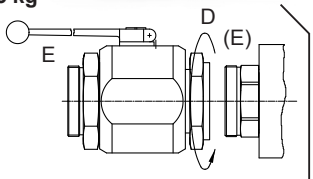

A

Typ	A	AF*	(BSP) Typ No.	LA	(NPT) Typ No.	LA
B3	1"	70	B3G1	19	B3N1	28
	1¼"	70	B3G1.25	21	B3N1.25	28
	1½"	70	B3G1.5	24	B3N1.5	34
	2"	70	B3G2	30	B3N2	34
B5	2"	95	B5G2	31	B5N2	31
	2½"	95	B5G2.5	31	B5N2.5	35

Standard

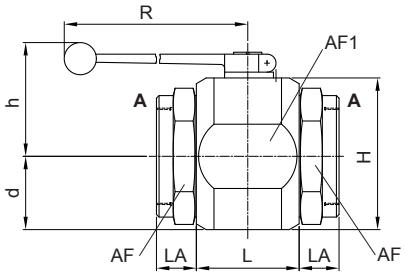

Dimensions

Typ	DN	L	H	AF1	d	h	R
B3	38	65	90	86	43	70	240
B5	55	80	118	114	57	82	280

DN= Ø Inside · Ø Innen
Ø Intérieur · Ø Interior

E

DIN 2353 (24°) DIN 3863 (60°)

Typ	E	α	LE	*AF	Typ No.
B3	M36x2	24°	24.5	70	B3E36
	M45x2	24°	26.5	70	B3E45
	M52x2	24°	26.5	70	B3E52
	M65x2	60°	27	70	B3E65
B5	M78x2	60°	35	95	B5E78

Option

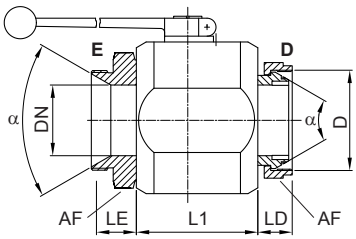

D

DIN 2353 (24°) DIN 3863 (60°)

Typ	D	α	L1	LD	*AF	Typ No.
B3	M52x2	24°	66	35	60	D52
	M65x2	60°	66	25	75	D65
B5	M78x2	60°	94	24	90	D78

Adaptors

Adaptor BD

Typ	D	B	*AF	LD	Typ No.
B3	M65x2	G1½"	70	47	BD65.G1.5
	M65x2	Ø57 Weld	70	45	BD65.57
B5	M78x2	G2"	90	48	BD78.G2
	M78x2	Ø70 Weld	90	44	BD78.70

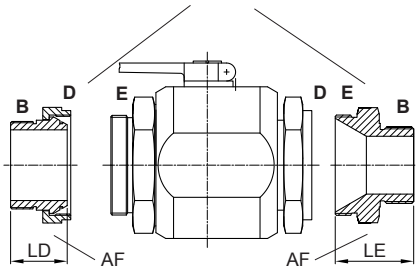

Adaptor EB

Size	E	B	*AF	LE	Typ No.
B3	M52x2	G1"	70	55	EB52.G1
	M52x2	G1 ¼"	70	54	EB52.G1.25
	M52x2	G1 ½"	70	52	EB52.G1.5
	M52x2	G2"	70	60	EB52.G2
	M65x2	G1 ½"	70	60	EB65.G1.5
B5	M65x2	G2"	70	52	EB65.G2
	M78x2	G2"	80	59	EB78.G2
	M78x2	G2 ½"	80	59	EB78.G2.5
	M78x2	NPT2 ½"	80	63	EB78.N2.5

*** AF** - Across Flats
AF - Schlüsselweite
AF - Ouverture de clé
AF - Ancho de llave

Blain Hydraulics GmbH
Pfaffenstrasse 1
74078 Heilbronn
Germany

Tel. 07131 2821-0
Fax 07131 282199
http://www.blain.de
e-mail:info@blain.de

BLAIN HYDRAULICS GmbH

Manufacturers of the Highest Quality:
Control Valves for Elevators
Tank Heaters - Hand Pumps
Pipe Rupture Valves - Ball Valves

Ball Valves with EV
Robinet à boisseau avec EV
Kugelhähne mit EV
Llaves esféricas con EV

¾"

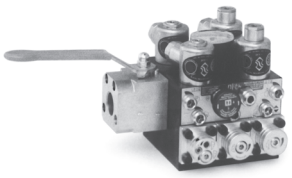

1½" & 2"

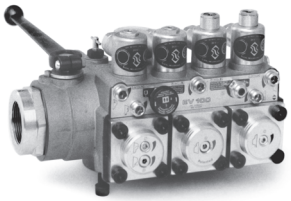

2½"

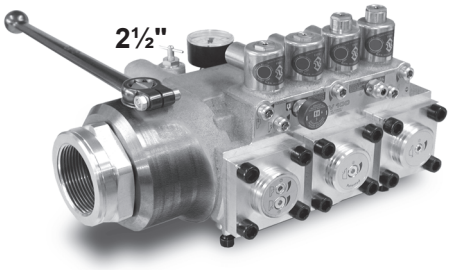

Standard Connection A

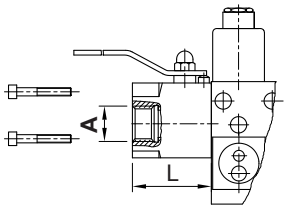

	A	L	Typ No.
✶ G (BSP)	½"	83	BG 0.5
G (BSP)	¾"	58	BG .75
G (BSP)	1"	58	BG 1
NPT	¾"	58	BN .75
NPT	1"	58	BN 1

✶ Reduction

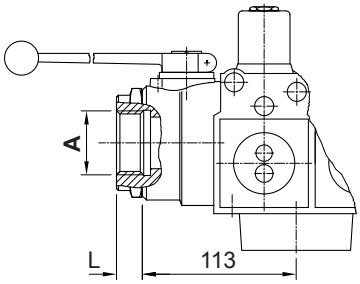

	A	L	Typ No.
G (BSP)	1"	19	BG 1.0
G (BSP)	1 ¼"	21	BG 1.25
G (BSP)	1 ½"	24	BG 1.5
G (BSP)	2"	30	BG 2
NPT	1"	28	BN 1
NPT	1 ¼"	28	BN 1.25
NPT	1 ½"	34	BN 1.5
NPT	2"	34	BN 2

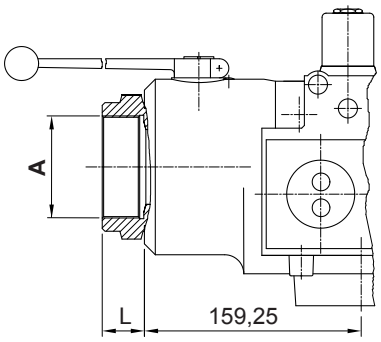

	A	L	Typ No.
G (BSP)	2 "	31	BG 2.0
G (BSP)	2 ½"	31	BG 2.5
NPT	2 "	31	BN 2.0
NPT	2 ½"	35	BN 2.5

Optional Connection E

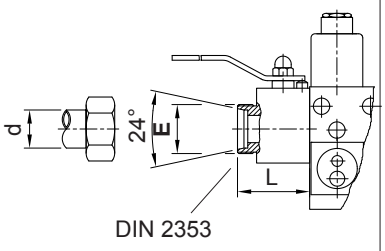

	E	L	d	Typ No.
✶	M 22x1.5	80	15	BM 22
	M 30x2	54	22	BM 30
	M 36x2	54	28	BM 36

✶ Reduction

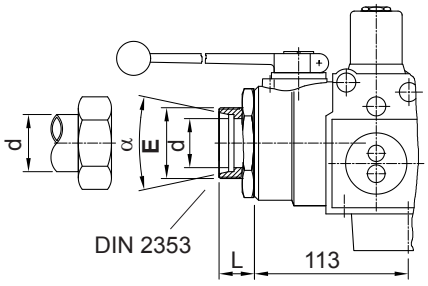

E	L	α	d	Typ No.
M 36x2	23	24°	28	BM 36.0
M 45x2	25	24°	35	BM 45
M 52x2	25	24°	42	BM 52

DIN 3863

E	L	α	Typ No.
M 65x2	26	60°	BM 65
M78x2	37	60°	BM 78

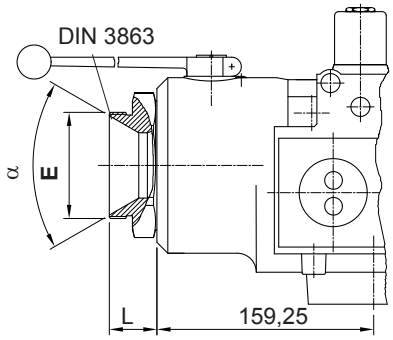

E	L	α	Typ No.
M78x2	35	60°	BM 78.0

Parts List

BG	Grip
BP	Limit Pin
BO	Shaft O-Ring
BS	Shaft
BL	Limit Disc
BR	Bearing ring
BA	Connection
BQ	Connection O-Ring
BH	Housing
BB	Ball
BT	POM Seal

Stückliste

BG	Griff
BP	Kerbstift
BO	0-Ring Schaltwelle
BS	Schaltwelle
BL	Arretierscheibe
BR	Gleitring
BA	Adapter
BQ	0-Ring Adapter
BH	Gehäuse
BB	Kugel
BT	POM Dichtung

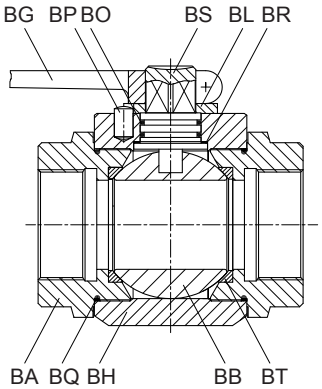

Liste des pièces

BG	Levier
BP	Goupille
BO	O-Ring axe du levier
BS	Axe du levier
BL	Disque d'arrêt
BR	Anneau de glissement
BA	Connexion
BQ	Connexion O-Ring
BH	Cage
BB	Boule
BT	POM joint

Lista de piezas

BG	Brazo
BP	Pasador tope
BO	Junta eje de giro
BS	Eje de giro
BL	Retén
BR	Anillo deslizante
BA	Conexión salida
BQ	Junta conexión salida
BH	Cuerpo
BB	Bola
BT	Junta de POM