Digital temperature transmitter
Model T12.10, universally programmable, head mounting version
Model T12.30, universally programmable, rail mounting version

Applications

- Process industry
- Machinery and plant construction

Special features

- Universal configuration via Windows PC, simulation of the sensor not necessary
- Isolation voltage AC 1500 V between sensor and current loop
- Signalling configurable for sensor burnout and sensor short circuiting
- For 100 % relative humidity, condensation allowed

Fig. left: digital temperature transmitter model T12.10
Fig. right: digital temperature transmitter model T12.30

Description

These temperature transmitters are designed for universal use in industrial applications. They offer a high accuracy, galvanic isolation and an excellent EMI protection.

In addition to the different sensor types e.g. sensors in accordance with DIN EN 60751, JIS C1606, DIN 43760, DIN EN 60584 or DIN 43710, customer-specific sensor characteristics can also be defined, through the input of value pairs.

The sensor connection arrangement is configurable, thus ensuring optimal lead wire compensation. Cold junction compensation for thermocouples is built-in, while external cold junction compensation can also be selected.

The configurable error signalling (e.g. sensor burnout, hardware errors, sensor over/under-range) ensures a high degree of monitoring flexibility.

Configuration changes can be quickly and easily transmitted to the T12 using the WIKA_T12 configuration software (free download at www.wika.com) and the communication interface (programming unit), which is available as an accessory. Its two-way communication enables the measured values to be displayed on a PC/notebook.

The programming unit provides voltage to the model T12 temperature transmitter, so that no additional supply is required to configure the T12.

The dimensions of the head-mounted transmitters match the Form-B DIN connecting heads with extended mounting space, e.g. WIKA model BSS.
The rail-mounted transmitters can be used for all standard rack systems in accordance with IEC 60715.

The transmitters are delivered with either a basic configuration or configured according to customers' specifications.

Specifications

Temperature transmitter input; configurable

Resistance sensor	Configurable measuring range [1]	Standard	α values	Minimum measuring span	Typical accuracy at 23 °C 5 K Basic accuracy	Temperature coefficient
Pt100	-200 ... +850 °C	**IEC 60751**: 1996	**α = 0.00385**	25 K	**≤ ±0.2 °C [3]**	**≤ ±0.026 °C / °C [4]**
Pt1000	-200 ... +850 °C	IEC 60751: 1996	**α** = 0.00385		≤ ±0.2 °C [3]	≤ ±0.026 °C / °C [4]
JPt100	-200 ... +500 °C	JIS C1606: 1989	α = 0.003916		≤ ±0.2 °C [3]	≤ ±0.026 °C / °C [4]
Ni100	-60 ... +250 °C	DIN 43760: 1987	α = 0.00618		≤ ±0.2 °C [3]	≤ ±0.026 °C / °C [4]
Resistance sensor	0 ... 5 kΩ			30 Ω	≤ ±0.07 Ω [5]	≤ ±0.026 Ω / °C [5]
Sensor current			max. 0.2 mA (Pt100)			
Connection type			**1 sensor** 2- /4- /**3-wire** (for further information, please refer to designation of terminal connection)			
Max. wire resistance			30 Ω each wire, 3-wire symmetrically			

Thermocouple	Configurable measuring range [1]	Standard	Minimum measuring span	Typical accuracy at 23 °C 5 K Basic accuracy	Temperature coefficient
Type J (Fe-CuNi)	-100 ... +1200 °C	IEC 584: 1998-06	50 K or 2 mV whichever is greater	≤ ±0.5 °C [6]	≤ ±0.05 °C / °C [6]
Type K (NiCr-Ni)	-180 ... +1372 °C	IEC 584: 1998-06		≤ ±0.5 °C [6]	≤ ±0.05 °C / °C [6]
Type L (Fe-CuNi)	-100 ... +900 °C	DIN 43760: 1985-12		≤ ±0.5 °C [6]	≤ ±0.05 °C / °C [6]
Type E (NiCr-Cu)	-100 ... +1000 °C	IEC 584: 1998-06		≤ ±0.5 °C [6]	≤ ±0.05 °C / °C [6]
Type T (Cu-CuNi)	-200 ... +400 °C	IEC 584: 1998-06		≤ ±0.5 °C [6]	≤ ±0.05 °C / °C [6]
Type N (NiCrSi-NiSi)	-180 ... +1300 °C	IEC 584: 1998-06	100 K	≤ ±0.5 °C [6]	≤ ±0.05 °C / °C [6]
Type U (Cu-CuNi)	-200 ... +600 °C	DIN 43710: 1985-12	75 K	≤ ±0.5 °C [6]	≤ ±0.05 °C / °C [6]
Type R (PtRh-Pt)	-50 ... +1768 °C	IEC 584: 1998-06	200 K	≤ ±0.5 °C [6]	≤ ±0.2 °C / °C [6]
Type S (PtRh-Pt)	-50 ... +1768 °C	IEC 584: 1998-06	200 K	≤ ±0.5 °C [7]	≤ ±0.2 °C / °C [6]
Type B (PtRh-Pt)	0 ... +1820 °C [2]	IEC 584: 1998-06	200 K	≤ ±0.5 °C [7]	≤ ±0.2 °C / °C [7]
Type W3, W3Re/W25Re	0 ... +2300 °C	ASTM E988	200 K	≤ ±0.5 °C [7]	≤ ±0.2 °C / °C [7]
Type W5, W5Re/W26Re	0 ... +2300 °C	ASTM E988	200 K	≤ ±0.5 °C [7]	≤ ±0.2 °C / °C [7]
mV-Sensor	-10 ... +800 mV		4 mV	≤ ±0.2 mV [8]	≤ ±0.022 mV / °C [8]
Connection type		1 sensor (for further information, please refer to designation of terminal connection)			
Max. wire resistance		250 Ω			
Cold junction compensation, configurable		compensation; internal or external with Pt100 or with thermostat or off			

1) Other units e.g. °F and K on request
2) Technical data valid only for measuring range between 400 ... 1820 °C
3) Based on 3-wire Pt100, Ni100, 150 °C FS
4) Based on 150 °C FS, at ambient temperature range -40 … +85 °C
5) Based on R_{total} 1 kΩ (3-wire)
6) Based on 400 °C FS at ambient temperature range -40 … +85 °C for T12.10 or -20 ... +70 °C for T12.30
7) Based on 1000 °C FS at ambient temperature range -40 … +85 °C for T12.10 or -20 ... +70 °C for T12.30
8) Based on 400 mV FS at ambient temperature range -40 … +85 °C for T12.10 or -20 ... +70 °C for T12.30

bold: basic configuration

FS = Full scale of configured measuring range

User linerisation

Via software, customer-specific sensor curves can be stored in the transmitter, so that further sensor types can be used.
Number of data points: min. 2; max. 30

Analogue output, output limits, signalling, isolation resistance

Analogue output, configurable	**linear to temperature per IEC 60751**, JIS C1606, DIN 43760 (for resistance sensors) or linear to temperature per IEC 60584, DIN 43710 (for thermocouples) **4 ... 20 mA** or 20 ... 4 mA, 2-wire design	
Output limits, configurable	lower limit	upper limit
per NAMUR NE 43	**3.8 mA**	**20.5 mA**
not active	3.6 mA	23.0 mA
customer specific, adjustable	3.6 ... 4.0 mA	20.0 ... 23.0 mA
Current value for signalling, configurable	**down scale**	up scale
per NAMUR NE 43	**< 3.6 mA (3.5 mA)**	> 21.0 mA (21.5 mA)
default value	3.5 ... 12.0 mA	12.0 ... 23.0 mA
In simulation mode, independent from input signal, simulation value configurable from 3.5 ... 23.0 mA		
Load R_A	$R_A \leq (U_B - 9\ V) / 0.023\ A$ with R_A in Ω and U_B in V	
Isolation voltage (input to analogue output)	AC 1500 V, (50 Hz / 60 Hz); 60 s	
Power consumption with U_B = 24 V	max. 552 mW	

Rise time, damping, measuring rate

Rise time t_{90}	approx. 0.5 s
Damping, configurable	**off**; configurable between 0.5 s up to 60 s possible
Turn on time (time to get the first measured value)	5 s
Measuring rate	Measured value update approx. 2/s

bold: basic configuration

Measuring deviation, temperature coefficient

Load effect	±0.01 % of span / 100 Ω
Power supply effect	±0.005 % of span / V
Warm-up time	after approx. 5 minutes the instrument will function to the specified technical data (accuracy)

Input	Measuring deviation [1] per DIN EN 60770, 23 °C ±5 K	Temperature coefficient [2] from -40 ... +85 °C	Connection lead effects
Resistance thermometer (Pt100)	±0.2 K or ±(0.025 % FS + 0.1) K	±(0.025 % FS + 0.09) K / 10 K	4-wire: no effect (0 to 30 Ω each wire) 3-wire: ± 0.02 Ω / 10 Ω (0 to 30 Ω each wire) 2-wire: connection lead effects [4]
Resistance sensor	±0.07 Ω or ±0.03 % FS in Ω	±(0.025 % FS + 0.01) Ω / 10 K	
Thermocouples type T, E, J, L, K, N, U [3]	±0.5 K or ±0.05 % FS or ± 10 µV	±(0.05 % FS + 0.1) K / 10 K or ±0.5 K / 10 K	
type R, S, B, W3, W5 [3]	±0.5 K or ±0.05 % FS or ± 10 µV	±2 K / 10 K	0.5 µV / 10 Ω [5]
type B	400 °C < MW < 1820 °C: ±1.7 K or ±10 µV	±2 K / 10 K	0.5 µV / 10 Ω [5]
mV-sensor	±10 µV or ±0.05 % FS in mV	±(0.05 % FS + 0.02) mV / 10 K	0.1 µV / 10 Ω [5]
Cold junction compensation (CJC)	±1.0 K	±0.2 K / 10 K	
Output	±0.05 % of span	±0.1 % of span / 10 K	

Total measuring deviation: su of input + output per DIN EN 60770, 23 °C ± 5 K

FS Full scale value of configurated measuring range

1) The higher value applies
2) With extended ambient temperature range (-50 … +85 °C) the double value applies
3) Thermocouples types T, K, N, U: valid only for configured lower limit of measuring range ≥ -150 °C
4) Manually compensation possible
5) Within the range to 250 Ω wire resistance

Monitoring

Test current for sensor monitoring [6]	nom. 33 µA during test cycle, otherwise 0 µA
Sensor burnout monitoring	activated
Self monitoring	automatic performance of an initial test after connecting the power supply

6) Valid for thermocouple only.

Explosion protection, power supply

Model	Approvals	Permissible ambient or storage temperature	Safety-related maximum vales for Sensor (connections 1 up to 4)	Current loop (connections ±)	Power supply U_B [1]
T12.10.000, T12.30.000	without	-40 ... +85 °C -20 ... +70 °C	-	-	9 ... 36 V
T12.10.002, T12.30.002	**EC-type examination certificate:** **DMT98 ATEX E 008 X** **Zone 0, 1**: II 1G EEx ia IIB/IIC T4/T5/T6 intrinsically safe per directive 94/9/EG (ATEX)	-40 ... +85 °C (T4) -40 ... +75 °C (T5) -40 ... +60 °C (T6) -20 ... +70 °C (T4) -20 ... +70 °C (T5) -20 ... +60 °C (T6)	U_o = DC 11.5 V I_o = 31 mA P_o = 87 mW IIB: C_o = 11 µF L_o = 8.6 mH IIC: C_o = 1.5 µF L_o = 8.6 mH	U_i = DC 30 V I_i = 100 mA P_i = 705 mW C_i = 25 nF L_i = 0.65 mH	9 ... 30 V
T12.10.006, T12.30.006	**CSA File No. LR 105000-7** **Intrinsically safe:** Cl. I / Div. 1, Group A,B,C,D	-40 ... +85 °C (T4) -40 ... +75 °C (T5) -40 ... +60 °C (T6) -20 ... +70 °C (T4) -20 ... +70 °C (T5) -20 ... +60 °C (T6)	U_{oc} = DC 11.5 V I_{sc} = 31 mA P_{max} = 87 mW C_a = 0.4 µF L_o = 8.65 mH	U_{max} = DC 30 V I_{max} = 100 mA P_{max} = 705 mW C_i = 25 nF L_i = 0.65 mH	9 ... 30 V
T12.10.008, T12.30.008	**FM approval:** **Installation Drawing No. 3184731** **Intrinsically safe:** Cl. I / Div. 1, Group A,B,C,D	-40 ... +85 °C (T4) -40 ... +75 °C (T5) -40 ... +60 °C (T6) -20 ... +70 °C (T4) -20 ... +70 °C (T5) -20 ... +60 °C (T6)	U_{oc} = DC 11.5 V I_{sc} = 31 mA P_{max} = 87 mW C_a = 1.5 µF L_a = 8.65 mH	U_{max} = DC 30 V I_{max} = 100 mA P_{max} = 705 mW C_i = 25 nF L_i = 0.65 mH	9 ... 30 V
T12.10.009, T12.30.009	**Zone 2**: II 3G Ex nA IIC T4/T5/T6 II 3G Ex nL IIC T4/T5/T6 II 3G Ex ic IIC T4/T5/T6	-40 ... +85 °C (T4) -40 ... +75 °C (T5) -40 ... +60 °C (T6) -20 ... +70 °C (T4) -20 ... +70 °C (T5) -20 ... +60 °C (T6)	U_o = DC 5 V I_o = 0.25 mA C_o = 1000 µF L_o = 1000 mH	U_i = DC 36 V P_i = 1 W C_i = 25 nF L_i = 0.65 mH	9 ... 36 V

1) Power supply input protected against reverse polarity; Load $R_A \leq (U_B - 9\ V) / 0.023\ A$ with R_A in Ω and U_B in V
{ } Items in curved brackets are optional extras for additional price, not for rail mounting T12.30

Ambient conditions

Climate class DIN EN 60654-1	T12.10: Cx (-40 … +85 °C, 5 % up to 95 % relative air humidity) T12.30: Bx (-20 ... +70 °C, 5 % up to 95 % relative air humidity)
Maximum permissible humidity	T12.10: 100 % relative humidity (unlimited with isolated sensor connection wires) moisture condensation permissible DIN IEC 68-2-30 Var. 2 T12.30: 90 % relative humidity (DIN IEC 68-2-30 Var. 2)
Vibration	10 ... 2000 Hz 5 g DIN IEC 68-2-6
Shock	DIN IEC 68-2-27 30 g
Salt mist	DIN IEC 68-2-11
EMC directive	2004/108/EG, DIN EN 61326 emission (Group 1, Class B) and immunity (industrial locations), as well as NAMUR NE21

Case

Transmitter model	Material	Weight	Ingress protection [2]	Terminal connections (screws captive)
T12.10 head mounting version	Plastic PBT, glass-fibre reinforced	0.07 kg	IP 00 electronics completely potted	Wire cross-section max. 1.5 mm²
T12.30 rail mounting version	Plastic	0.2 kg	IP 20	Wire cross-section max. 2.5 mm²

2) Ingress protection per IEC 60529 / EN 60529

Load diagram

The permissible load is dependent upon the loop power supply voltage.

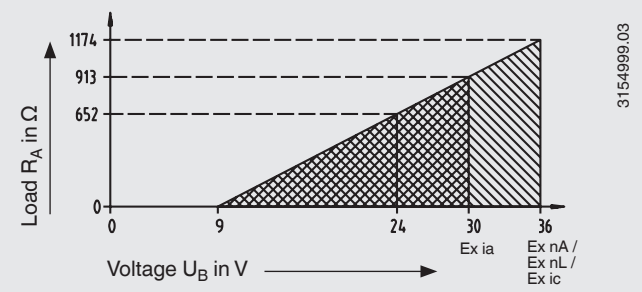

Designation of terminal connections

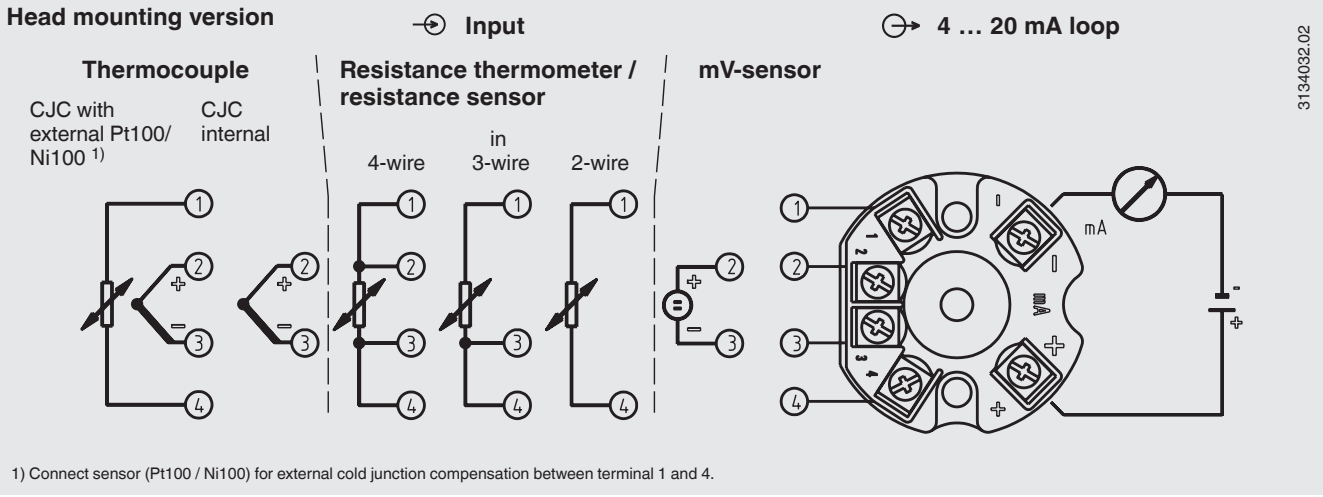

1) Connect sensor (Pt100 / Ni100) for external cold junction compensation between terminal 1 and 4.

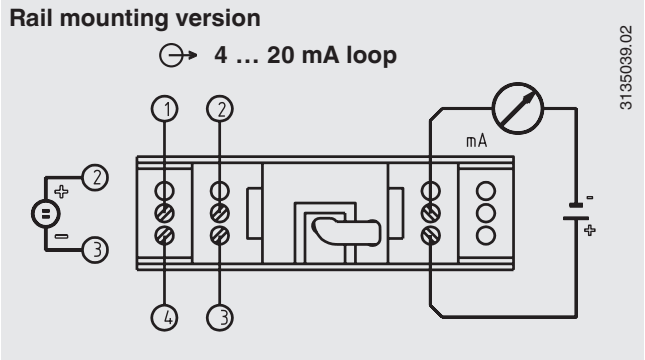

Dimensions in mm

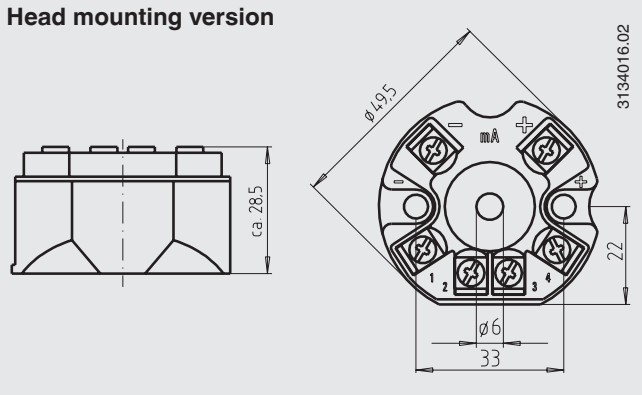

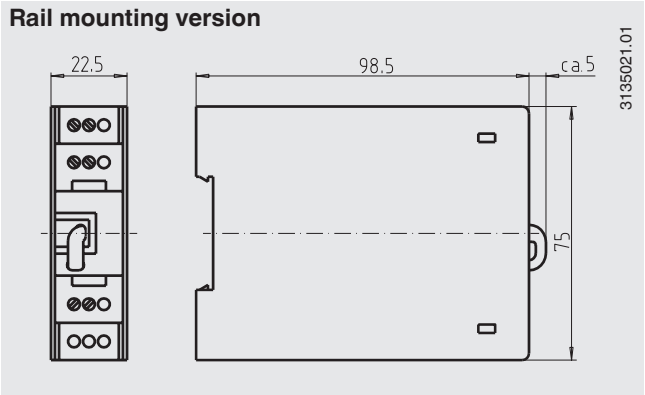

Accessories

Field housing, Adapter

Model	Design	Special features	Dimensions	Order No.
Field housing 	Plastic (ABS)	Field case, IP 65, for mounting of a head mounting transmitter, permissible ambient temperature range: -40 ... +80 °C 82 x 80 x 55 mm (W x L x H), with two cable glands M16 x 1.5	80 x 82 x 55 mm	3301732
Adapter 	Plastic / stainless steel	suitable for TS 35 per DIN EN 60715 (DIN EN 50022) or TS 32 per DIN EN 50035	60 x 20 x 41.6 mm	3593789
Adapter 	Steel tin galvanized	suitable for TS 35 per DIN EN 60715 (DIN EN 50022)	49 x 8 x 14 mm	3619851

Configuration set

Model	Special features	Order No.
Programming unit Model PU-448 	■ Easy to use ■ LED statusdisplay ■ Compact design ■ Now no further power supply is needed for either the programming unit or for the transmitter ■ Measuring the loop current of the models T12, T24 transmitter and the model TR21, TR30 and TR31 resistance thermometers is possible	11606304
Magnetic quick connector Model magWIK 	■ Replacement for crocodile clips and HART® terminals ■ Fast, safe and tight electrical connection ■ For all configuration and calibration processes	11604328

Software

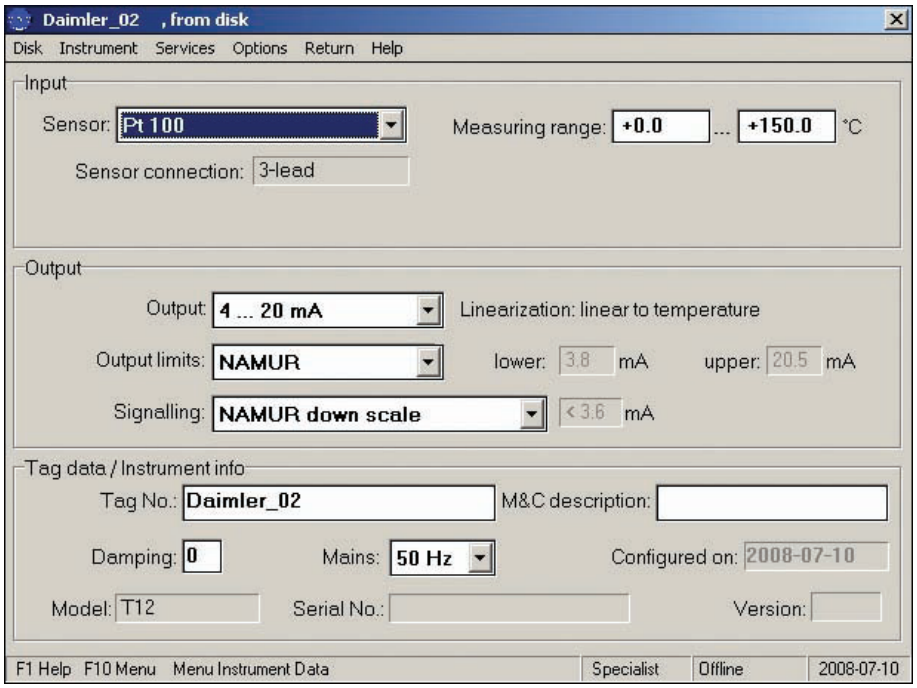

WIKA configuration software WIKA_T12 (multi-lingual, online help) as free-of-charge download via www.wika.com.

Connection of model PU-448 programming unit

Model T12.10, head mounting version

Connection PU-448 ↔ temperature transmitter
(option: quick connector magWIK)

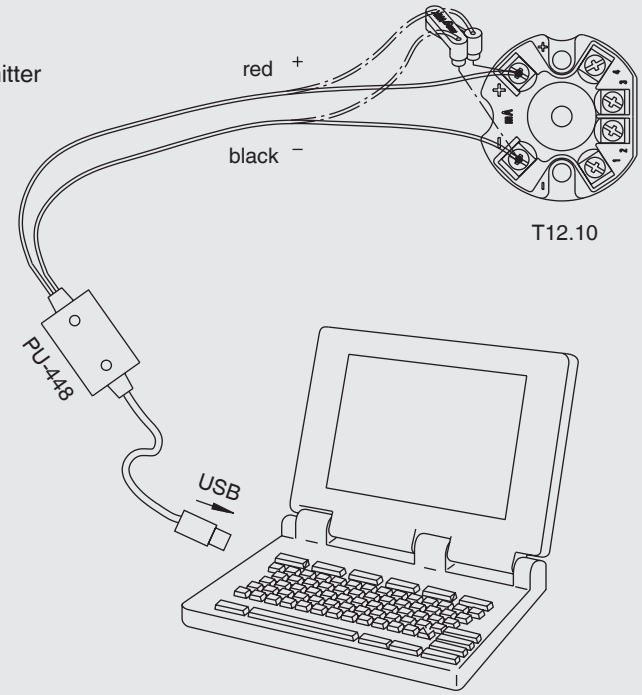

Model T12.30, rail mounting version

Connection PU-448 ↔ temperature transmitter

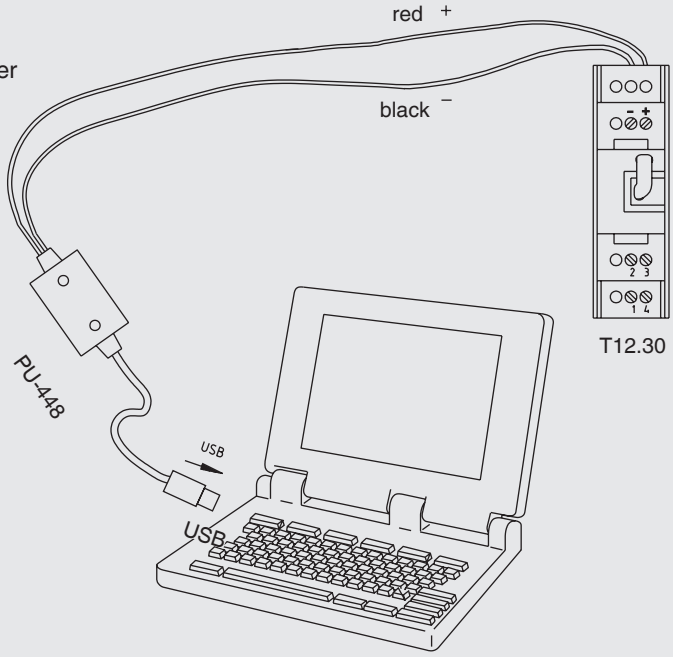

WIKA Alexander Wiegand SE & Co. KG
Alexander-Wiegand-Straße 30
63911 Klingenberg/Germany
Tel. (+49) 9372/132-0
Fax (+49) 9372/132-406
E-mail info@wika.de
www.wika.de